DATA SHEET

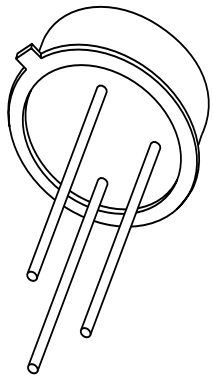

2N2907; 2N2907A
PNP switching transistors

Product specification
Supersedes data of September 1994
File under Discrete Semiconductors, SC04

1997 May 30

Philips
Semiconductors

PHILIPS

PNP switching transistors 2N2907; 2N2907A

FEATURES

- High current (max. 600 mA)
- Low voltage (max. 60 V).

APPLICATIONS

- Switching and linear amplification.

DESCRIPTION

PNP switching transistor in a TO-18 metal package.
NPN complements: 2N2222 and 2N2222A.

PINNING

PIN	DESCRIPTION
1	emitter
2	base
3	collector, connected to case

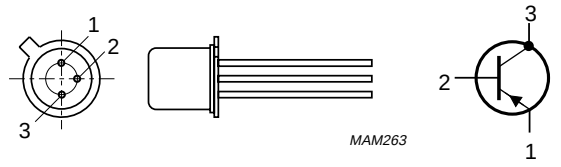

Fig.1 Simplified outline (TO-18) and symbol.

QUICK REFERENCE DATA

SYMBOL	PARAMETER	CONDITIONS	MIN.	MAX.	UNIT
V_{CBO}	collector-base voltage	open emitter	–	–60	V
V_{CEO}	collector-emitter voltage	open base			
	2N2907		–	–40	V
	2N2907A		–	–60	V
I_C	collector current (DC)		–	–600	mA
P_{tot}	total power dissipation	$T_{amb} \leq 25$ °C	–	400	mW
h_{FE}	DC current gain	$I_C = -150$ mA; $V_{CE} = -10$ V	100	300	
f_T	transition frequency	$I_C = -50$ mA; $V_{CE} = -20$ V; f = 100 MHz	200	–	MHz
t_{off}	turn-off time	$I_{Con} = -150$ mA; $I_{Bon} = -15$ mA; $I_{Boff} = 15$ mA	–	300	ns

LIMITING VALUES

In accordance with the Absolute Maximum Rating System (IEC 134).

SYMBOL	PARAMETER	CONDITIONS	MIN.	MAX.	UNIT
V_{CBO}	collector-base voltage	open emitter	–	–60	V
V_{CEO}	collector-emitter voltage	open base; $I_C < -100$ mA			
	2N2907		–	–40	V
	2N2907A		–	–60	V
V_{EBO}	emitter-base voltage	open collector	–	–5	V
I_C	collector current (DC)		–	–600	mA
I_{CM}	peak collector current		–	–800	mA
I_{BM}	peak base current		–	–200	mA
P_{tot}	total power dissipation	$T_{amb} \leq 25$ °C	–	400	mW
		$T_{case} \leq 25$ °C	–	1.2	W
T_{stg}	storage temperature		–65	+150	°C
T_j	junction temperature		–	200	°C
T_{amb}	operating ambient temperature		–65	+150	°C

THERMAL CHARACTERISTICS

SYMBOL	PARAMETER	CONDITIONS	VALUE	UNIT
$R_{th\ j\text{-}a}$	thermal resistance from junction to ambient	in free air	438	K/W
$R_{th\ j\text{-}c}$	thermal resistance from junction to case		146	K/W

CHARACTERISTICS

T_{amb} = 25 °C unless otherwise specified.

SYMBOL	PARAMETER	CONDITIONS	MIN.	MAX.	UNIT
I_{CBO}	collector cut-off current 2N2907	$I_E = 0$; $V_{CB} = -50$ V	–	–20	nA
		$I_E = 0$; $V_{CB} = -50$ V; $T_{amb} = 150$ °C	–	–20	μA
I_{CBO}	collector cut-off current 2N2907A	$I_E = 0$; $V_{CB} = -50$ V	–	–10	nA
		$I_E = 0$; $V_{CB} = -50$ V; $T_{amb} = 150$ °C	–	–10	μA
I_{EBO}	emitter cut-off current	$I_C = 0$; $V_{EB} = -5$ V	–	–50	nA
h_{FE}	DC current gain 2N2907	$V_{CE} = -10$ V			
		$I_C = -0.1$ mA	35	–	
		$I_C = -1$ mA	50	–	
		$I_C = -10$ mA	75	–	
		$I_C = -150$ mA; note 1	100	300	
		$I_C = -500$ mA; note 1	30		
h_{FE}	DC current gain 2N2907A	$V_{CE} = -10$ V			
		$I_C = -0.1$ mA	75	–	
		$I_C = -1$ mA	100	–	
		$I_C = -10$ mA	100	–	
		$I_C = -150$ mA; note 1	100	300	
		$I_C = -500$ mA; note 1	50	–	
V_{CEsat}	collector-emitter saturation voltage	$I_C = -150$ mA; $I_B = -15$ mA; note 1		–400	mV
		$I_C = -500$ mA; $I_B = -50$ mA; note 1		–1.6	V
V_{BEsat}	base-emitter saturation voltage	$I_C = -150$ mA; $I_B = -15$ mA; note 1		–1.3	V
		$I_C = -500$ mA; $I_B = -50$ mA; note 1		–2.6	V
C_c	collector capacitance	$I_E = i_e = 0$; $V_{CB} = -10$ V; f = 1 MHz	–	8	pF
C_e	emitter capacitance	$I_C = i_c = 0$; $V_{EB} = -2$ V; f = 1 MHz	–	30	pF
f_T	transition frequency	$I_C = -50$ mA; $V_{CE} = -20$ V; f = 100 MHz; note 1	200	–	MHz
Switching times (between 10% and 90% levels); see Fig.2					
t_{on}	turn-on time	$I_{Con} = -150$ mA; $I_{Bon} = -15$ mA; $I_{Boff} = 15$ mA	–	45	ns
t_d	delay time		–	15	ns
t_r	rise time		–	35	ns
t_{off}	turn-off time		–	300	ns
t_s	storage time		–	250	ns
t_f	fall time		–	50	ns

Note

1. Pulse test: $t_p \leq 300$ μs; $\delta \leq 0.02$.

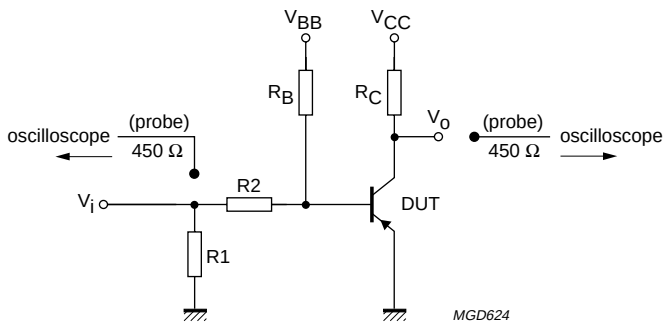

V_i = –9.5 V; T = 500 µs; t_p = 10 µs; $t_r = t_f \leq 3$ ns.
R1 = 68 Ω; R2 = 325 Ω; R_B = 325 Ω; R_C = 160 Ω.
V_{BB} = 3.5 V; V_{CC} = –29.5 V.
Oscilloscope input impedance Z_i = 50 Ω.

Fig.2 Test circuit for switching times.

PACKAGE OUTLINE

Metal-can cylindrical single-ended package; 3 leads **SOT18/13**

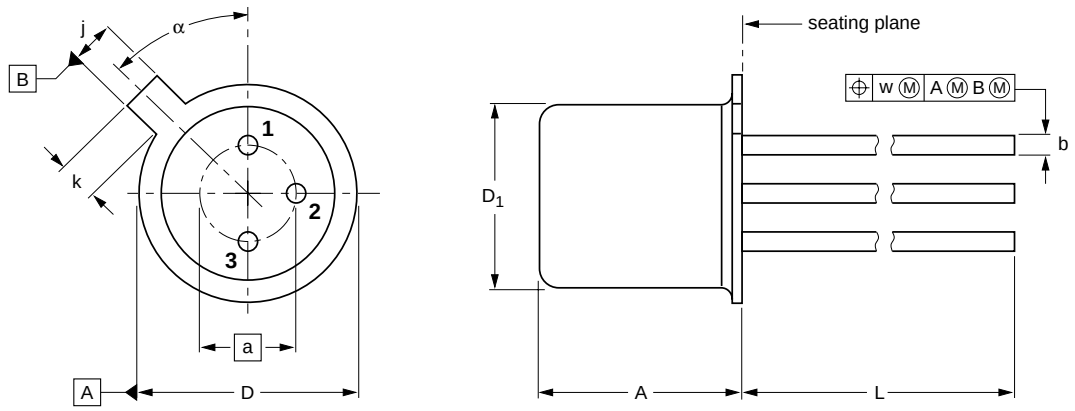

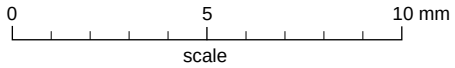

DIMENSIONS (millimetre dimensions are derived from the original inch dimensions)

UNIT	A	a	b	D	D_1	j	k	L	w	α
mm	5.31 4.74	2.54	0.47 0.41	5.45 5.30	4.70 4.55	1.03 0.94	1.1 0.9	15.0 12.7	0.40	45°

OUTLINE VERSION	REFERENCES				EUROPEAN PROJECTION	ISSUE DATE
	IEC	JEDEC	EIAJ			
SOT18/13	B11/C7 type 3	TO-18				97-04-18